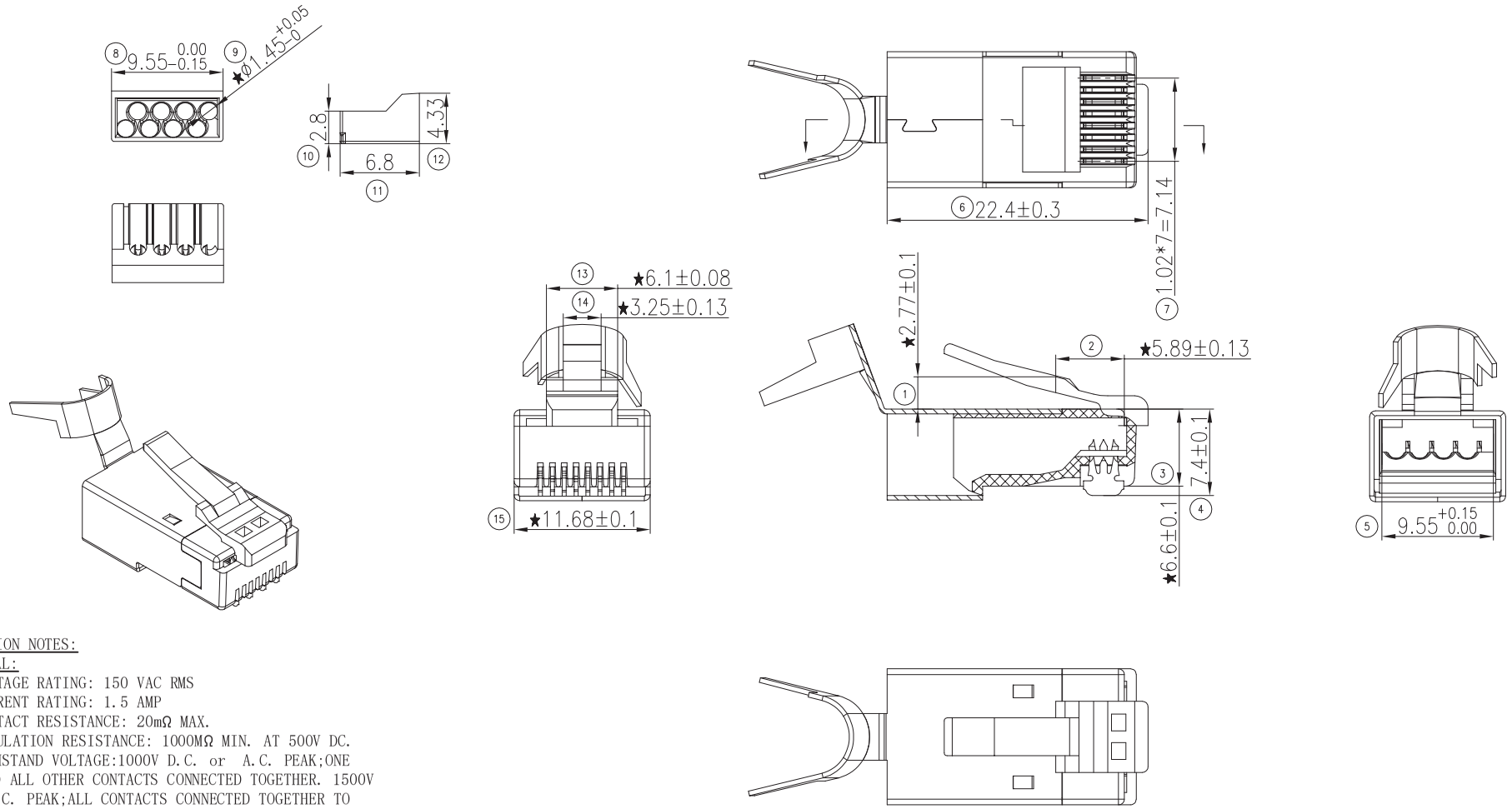

SPECIFICATION NOTES:

1. ELECTRICAL:
   1.1 VOLTAGE RATING: 150 VAC RMS
   1.2 CURRENT RATING: 1.5 AMP
   1.3 CONTACT RESISTANCE: 20mΩ MAX.
   1.4 INSULATION RESISTANCE: 1000MΩ MIN. AT 500V DC.
   1.5 WITHSTAND VOLTAGE:1000V D.C. or A.C. PEAK;ONE CONTACT TO ALL OTHER CONTACTS CONNECTED TOGETHER. 1500V D.C. OR A.C. PEAK;ALL CONTACTS CONNECTED TOGETHER TO SHIELD,(HOUSING/MOUNTING PLATE) IF PRESENT. @ 0.5mA 50 Hz OR 60 Hz A MINUTE
2. MECHANICAL:
   2.1 RETENTION STRENGTH:50N MIN. FOR 60S 5S
   2.2 OPERATING LIFE:750 CYCLES MIN.
   2.3 INSERTION FORCE:30N MAX.
3. ENVIRONMENTAL:
   3.1 OPERATION: -25!" +55! GB 10753-89
   3.2 STORAGE:-10!" +40! RELATIVE HUMIDITY<80%, GB 10753-89
   3.3 STORAGE TIME:12 MONTHS
   3.4 SALT SPRAY TEST:SEE TABLE
4. CHARACTERISTICS:
   4.1 PLUG WILL ACCEPT 21 OR 23 AWG WIRE HAVING A MAXIMUM INSULATION DIAMETER OF 1.35-1.45 MM AND A MAXIMUM DIAMETER CABLE JACKET OF 8.0 MM

SYM	Number	Bill No. of Alteration	Signature	Date

			Tolerance	
Drawn	Ding jian bo	2015.12.11	0.00-20.00	±0.10
Checked	Ge pei jun	2015.12.11	20.00-50.00	±0.15
Approved	Wang wei jun	2015.12.11	50.00-100.00	±0.20
			100.00-	±0.25
			Angle	±30'

equip®

Material				Item No.	112148
Angles Projection	Size	Scale	Unit	Part Name	Cat 8.1 RJ45 Shielded Plug
	A4	X:1	mm		
Sheet	1 OF 1	Version: A/0		ERP Part No.	